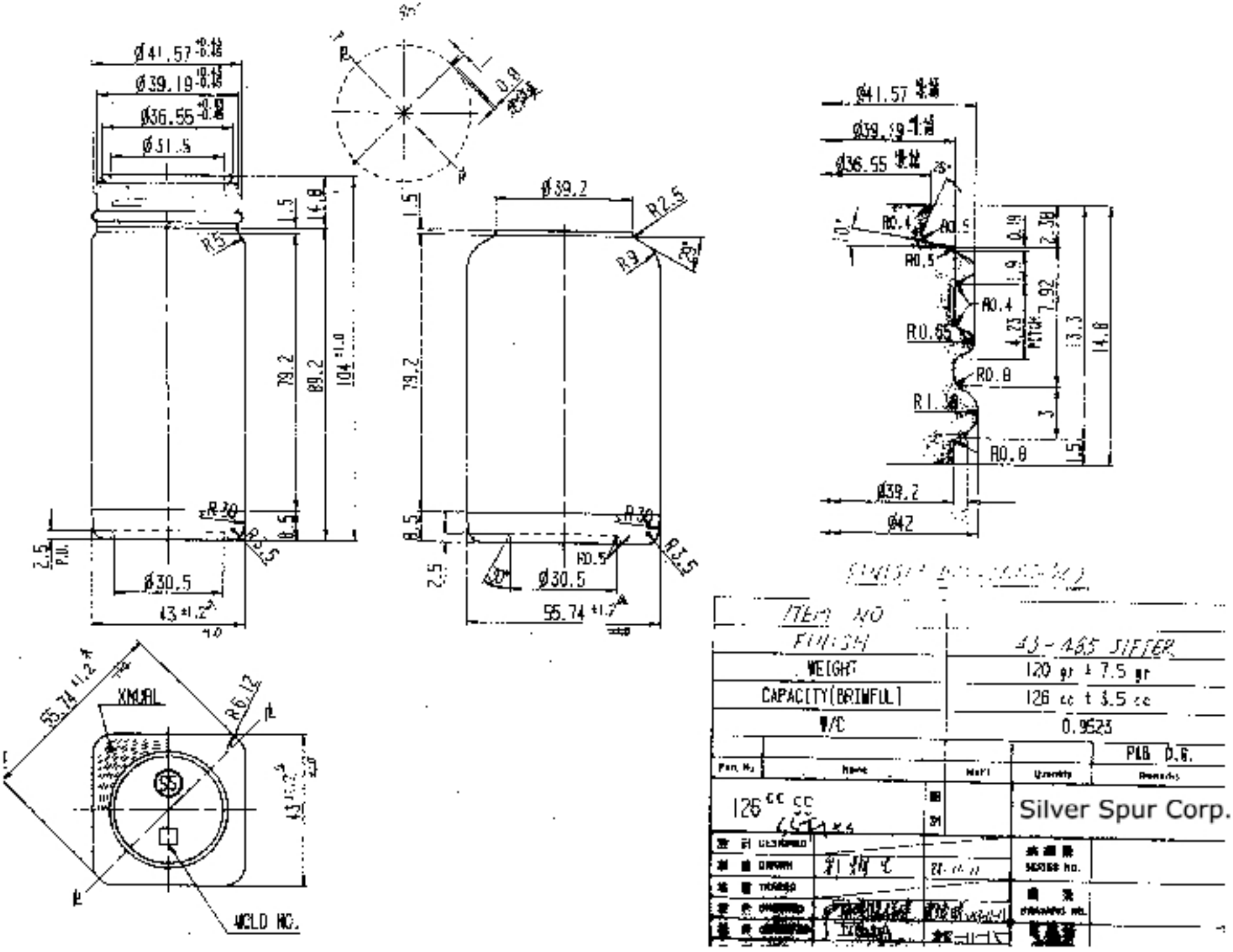
Ø41.57
Ø39.19
Ø36.55
Ø31.5
Ø39.2
R2.5
R3
R30
Ø30.5
43±1.2
55.74±1.2
79.2
89.2
104±1.0
14.8
7.92
13.3
R0.4
R0.5
R0.65
R0.8
R1.3
Ø42
XMORL
R0.12
WELD NO.
ITEM NO
FINISH
WEIGHT
43-465 SIFTER
120 gr ± 7.5 gr
CAPACITY(BRIMFUL)
126 cc ± 3.5 cc
W/C
0.9523
PLB D.G.
Silver Spur Corp.