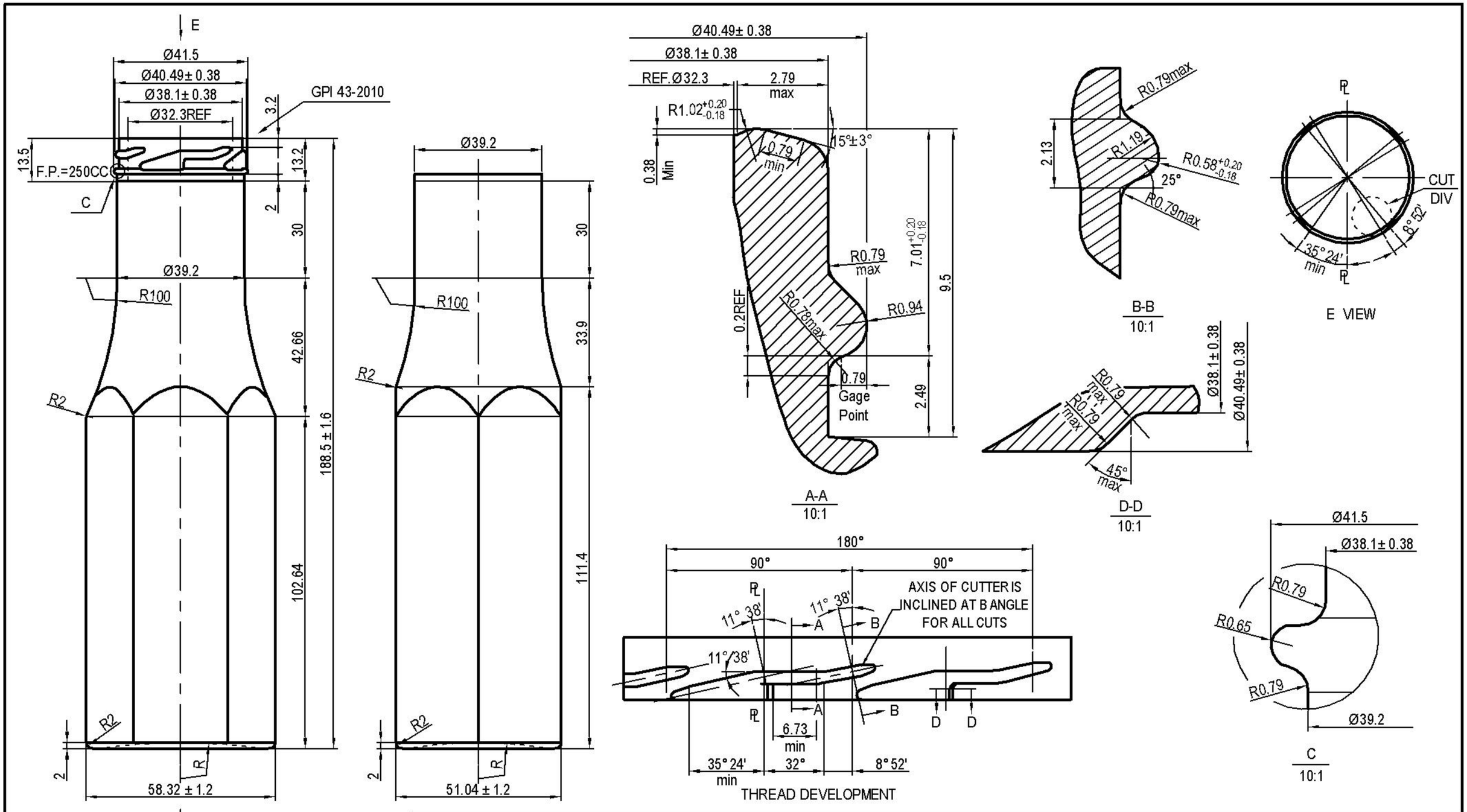

Nominal Capacity	250ml	Drawn	Jingsheng		Drawing Name	250ml Hexagon Jar	Scale
			Date	2006-04-26			
O. F. Capacity	262 ± 5ml	Checked			Material	Flint Glass	
			Date				
Weight	220 ± 11g	Approved			Silver Spur Corp.		
			Date				